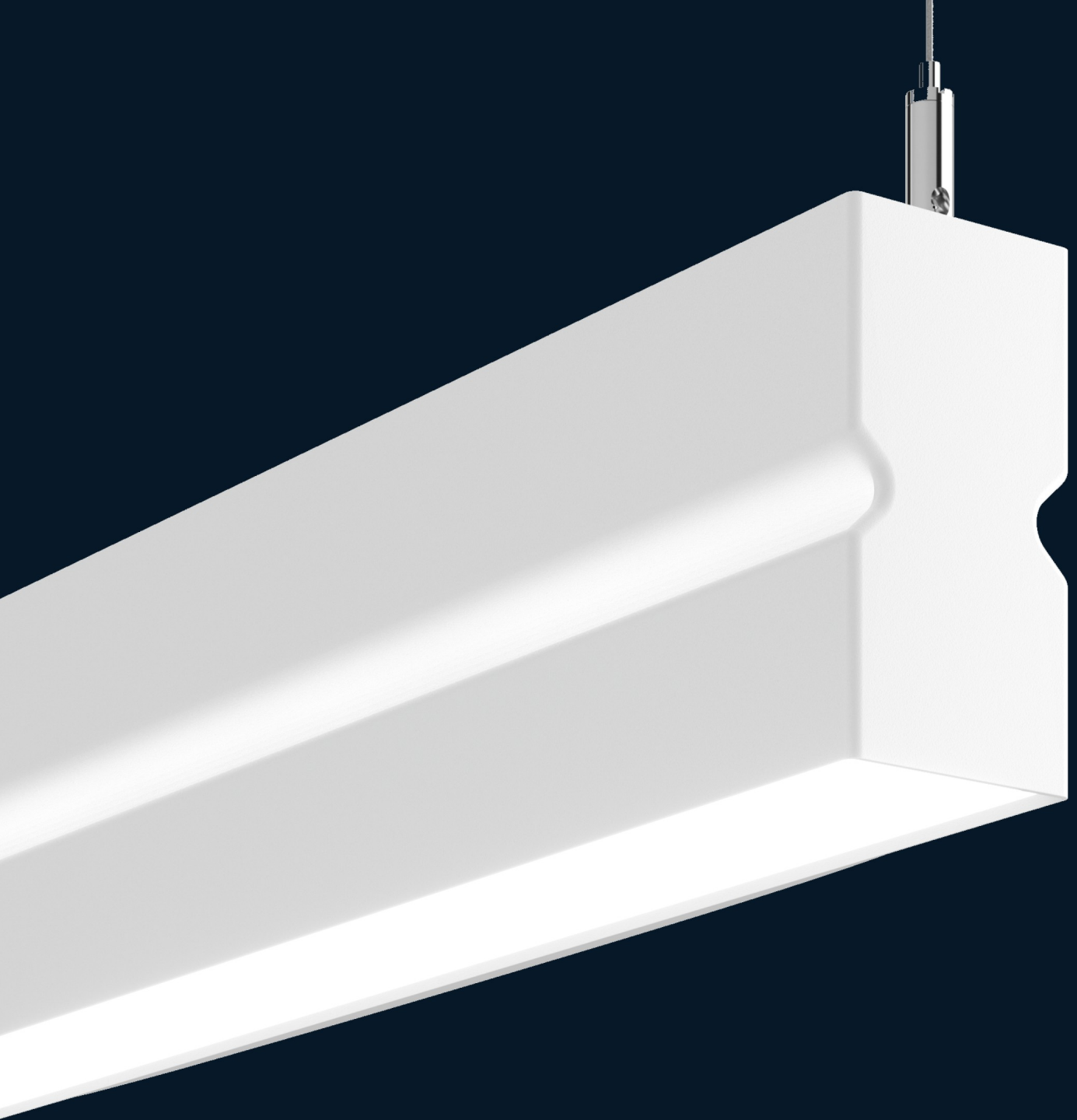

# FLUTE™

# INTRODUCTION

FLUTE takes the familiar block form and recasts it for the tech age. An illuminated reveal runs along each flank, fluting the profile and casting a soft halation glow down the sides. The hourglass contour looks light and aerodynamic, while the body stays compact.
With lumen packages from 200 to 1650 lm/ft, FLUTE delivers the light a space needs, without over- or under-lighting it. Pair direct light with the Comfort lens for softer, even distribution, or have FLUTE built bespoke to the specification.

DESIGNED BY SERGE CORNELISSEN



# VARIANTS



## SUSPENDED

Continuous runs on steel cable, direct or direct/indirect.

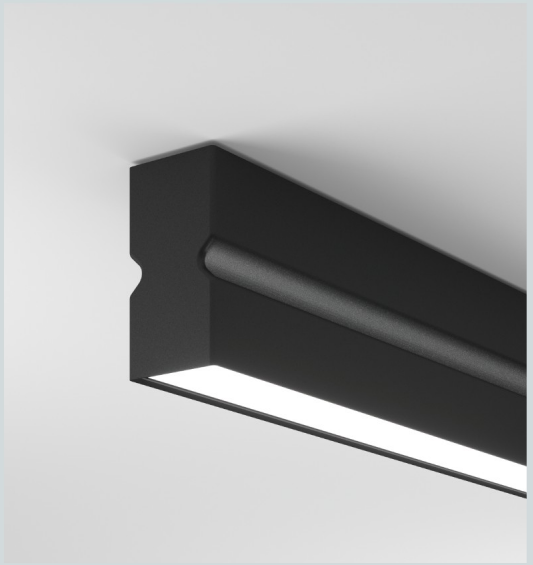

## SURFACE

Mounts directly over a J-box, 4 to 12 ft lengths.

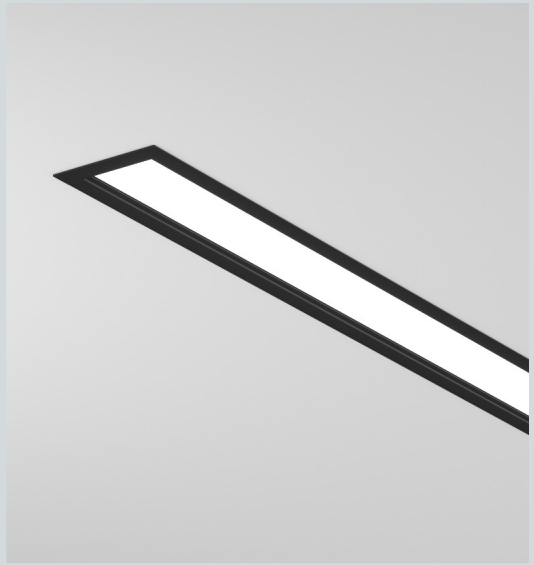

## RECESSED

Flush in grid or drywall, with trim or trimless details.

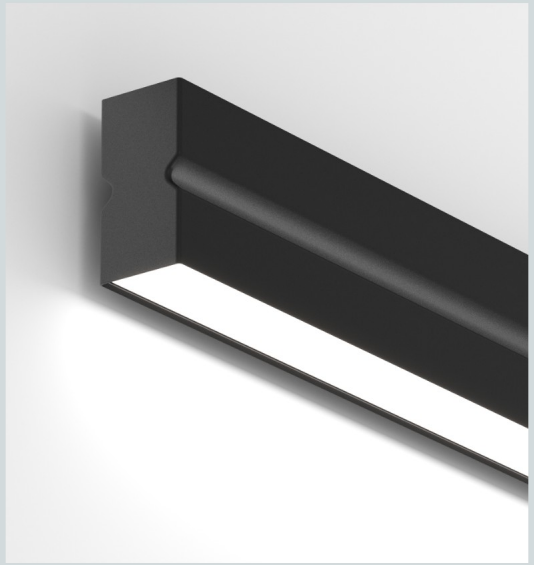

## WALL

Continuous wall runs, direct or direct/indirect.



# THE PROFILE

## HOURGLASS CONTOUR

A compact block form, pinched at the waist for a light, aerodynamic read.

## FLUTED REVEAL

An illuminated flute on each flank casts a soft halation glow along the sides.

## OPAL LENS

A seamless opal lens below gives a clean, even line of light.

US PAT. D967,491 · D969,389



FLUTE™

# SUSPENDED

Long continuous runs on steel cable, with direct or direct/indirect light and an illuminated fluted reveal.




## FLUTE SUSPENDED

Black runs trace the timber grid of a creative loft, a crisp line of light over desks and lounge.

# THE BOARDROOM

A single run in Silver Metallic draws a clean line over the table. Direct light, softened by the Comfort lens, keeps faces and paper evenly lit, while the glowing flanks add depth to rich timber walls.



# MOUNTING & OPTICS

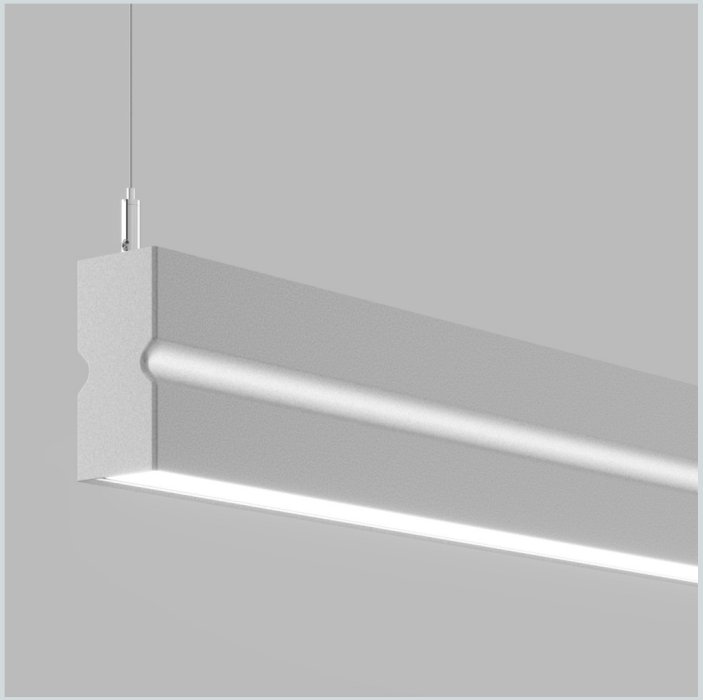

## SUSPENDED DIRECT

Up to 1400 lm/ft.
Batwing
Comfort

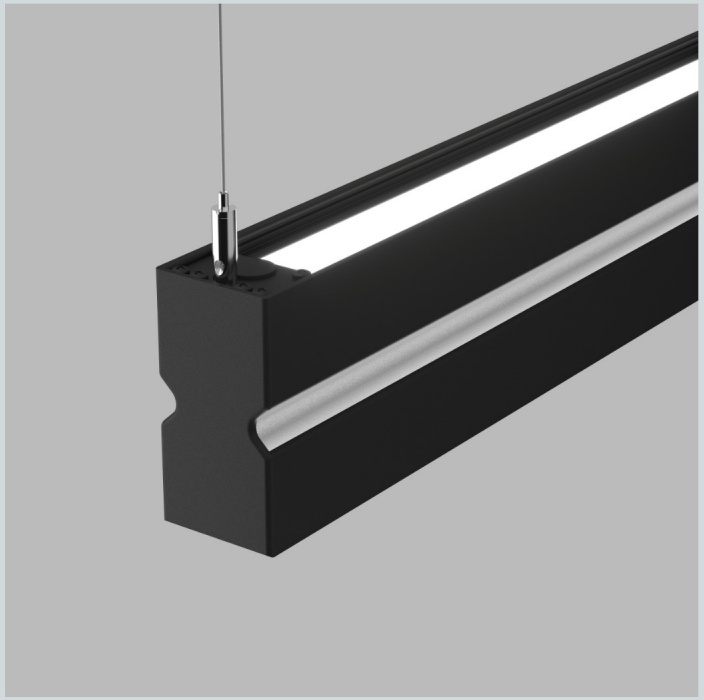

## DIRECT / INDIRECT

Up to 1650 lm/ft up.
Batwing
Asymmetric
Extra Wide Batwing

Suspended on 3, 6 or 9 ft aircraft cable over a J-box, in grid or hard ceilings.
An optional uplight blackout plate masks the uplight where ductwork sits above, as in loft applications.

# ALIGN N' LOCK™

One continuous line, with zero light leak at every joint.



## RUN LENGTHS

From 4 ft, in 2 ft increments. 6 in increments by factory.

## SECTIONS

Maximum section length of 4, 6, 8, 10 or 12 ft.

## POWER

One power cord per 50 linear feet. Longer runs: consult factory.



FLUTE™

# SURFACE

The same hourglass profile, mounted directly to the ceiling over a J-box for a clean line of direct light.



# SURFACE

Individual fixtures sit tight to the ceiling, keeping the glowing reveal and soft halation of the suspended run.

## LUMINAIRE
Direct

## LENGTHS
4, 6, 8, 10 or 12 ft

## OPTICS
Batwing · Comfort

## MOUNTING
Directly over J-box (by others)



FLUTE™

# RECESSED

A minimal 2 in lens set flush in the ceiling plane, in continuous runs up to 50 ft on one circuit.

# CEILING TYPES



GRID

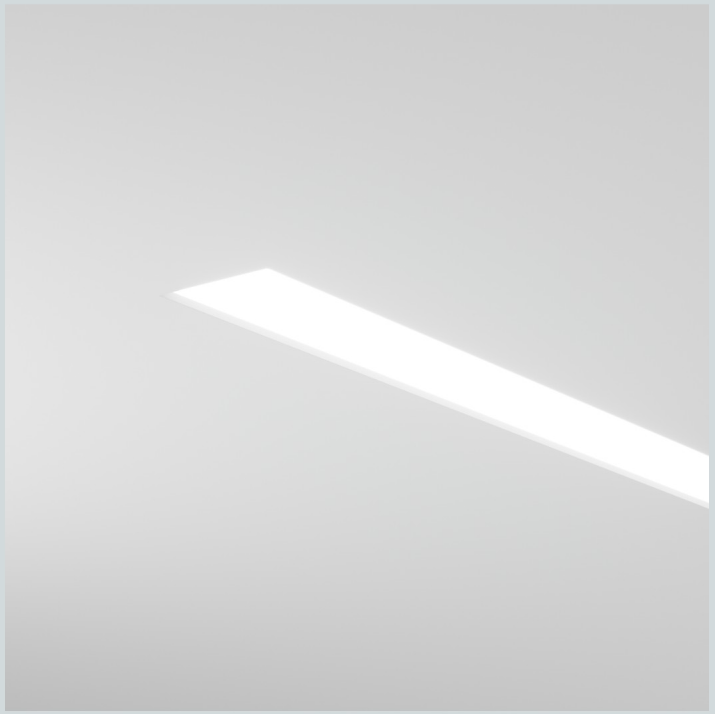

TRIMLESS

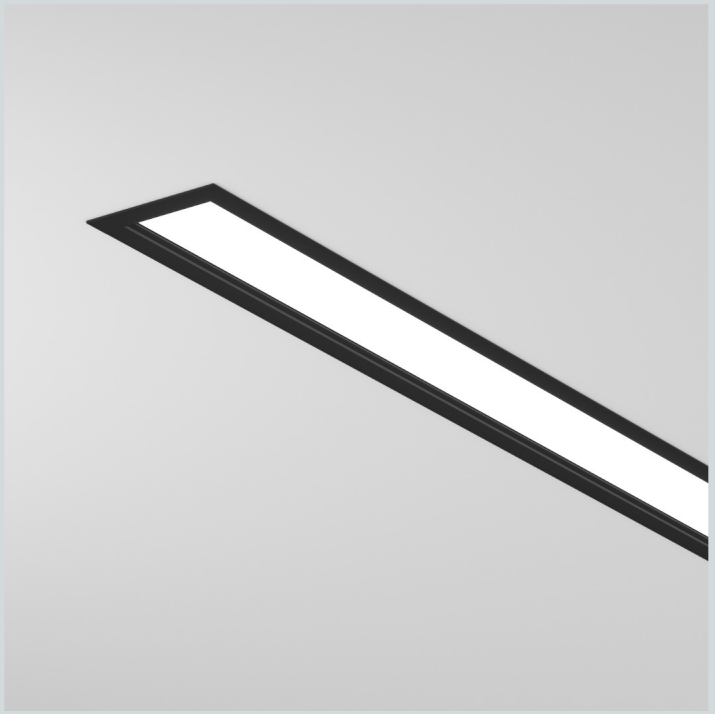

TRIM

Tegular and T-bar fit 9/16 in or 15/16 in grid. Trimless and trim suit drywall or concrete, with trim in White or Black Metallic. Chicago Plenum option available.



# RECESSED CONTINUOUS

A seamless opal lens draws one unbroken line through the ceiling, pairing with suspended runs in the same space.

### LUMINAIRE
Direct

### RUN LENGTH
From 4 ft, 2 ft increments

### SECTIONS
4 to 12 ft maximum

### OPTICS
Batwing · Comfort



FLUTE™

# WALL

Continuous wall runs that wash surfaces below and, with direct/indirect, graze the wall above.




# WALL CONTINUOUS

Joined with Align N' Lock for zero light leak, FLUTE Wall frames mirrors, corridors and feature walls.

## LUMINAIRES

Direct · Direct/Indirect

## OPTICS

Comfort · Diffused · Asymmetric

## RUN LENGTH

From 4 ft, 2 ft increments

## CIRCUITS

Single, dual or emergency circuit



# WOOD GRAIN

Light Cherry, Dark Walnut and White Oak bring warmth to the fluted profile, matching millwork and timber finishes.

Wood grain finishes may add lead time and setup charges.





# FINISHES

## FIXTURE

- White
- Silver Metallic
- Black Metallic
- Charcoal Metallic
- Champagne
- Gold Metallic
- Copper Metallic
- Bronze Metallic
- Red Metallic
- Midnight Blue

## WOOD GRAIN

- Light Cherry
- Dark Walnut
- White Oak

Fixture only

Metal finishes are textured powder coat. Wood grains may add lead time and setup charges.

| Technical Specifications | Suspended | Surface | Recessed | Wall |
|---|---|---|---|---|
| Lumen Packages | Direct 200–1400 LM/FT<br>Indirect 200–1650 LM/FT | Direct 200–1400 LM/FT | Direct 200–1400 LM/FT | Direct 200–1400 LM/FT<br>Indirect 200–1200 LM/FT |
| Efficacy | Up to 133 LPW direct<br>168 LPW indirect | Up to 133 LPW | Up to 135 LPW | Up to 133 LPW direct<br>168 LPW indirect |
| CCT | 2700K–4000K, Tunable White | 2700K–4000K, Tunable White | 2700K–4000K, Tunable White | 2700K–4000K, Tunable White |
| CRI | 80+ or 90+ | 80+ or 90+ | 80+ or 90+ | 80+ or 90+ |
| Optics | Batwing, Comfort<br>Up: Batwing, Asym., Wide | Batwing<br>Comfort | Batwing<br>Comfort | Comfort<br>Up: Diffused, Asym. |
| Mounting | Steel cable 3, 6, 9 ft<br>Grid or hard ceiling | Directly over J-box | Grid, trimless or trim | Directly over J-box |
| Lengths | Runs from 4 ft<br>2 ft increments | 4, 6, 8, 10, 12 ft | Runs from 4 ft<br>2 ft increments | Runs from 4 ft<br>2 ft increments |
| Dimming | 0-10V, DALI, DT8, PoE | 0-10V, DALI, DT8, PoE | 0-10V, DALI, DT8, PoE | 0-10V, DALI, DT8, PoE |
| Emergency | Integral or<br>generated circuit | Integral | Integral | Integral or<br>generated circuit |
| Lifetime (L70) | >108,000 hrs reported | >108,000 hrs reported | >108,000 hrs reported | >108,000 hrs reported |

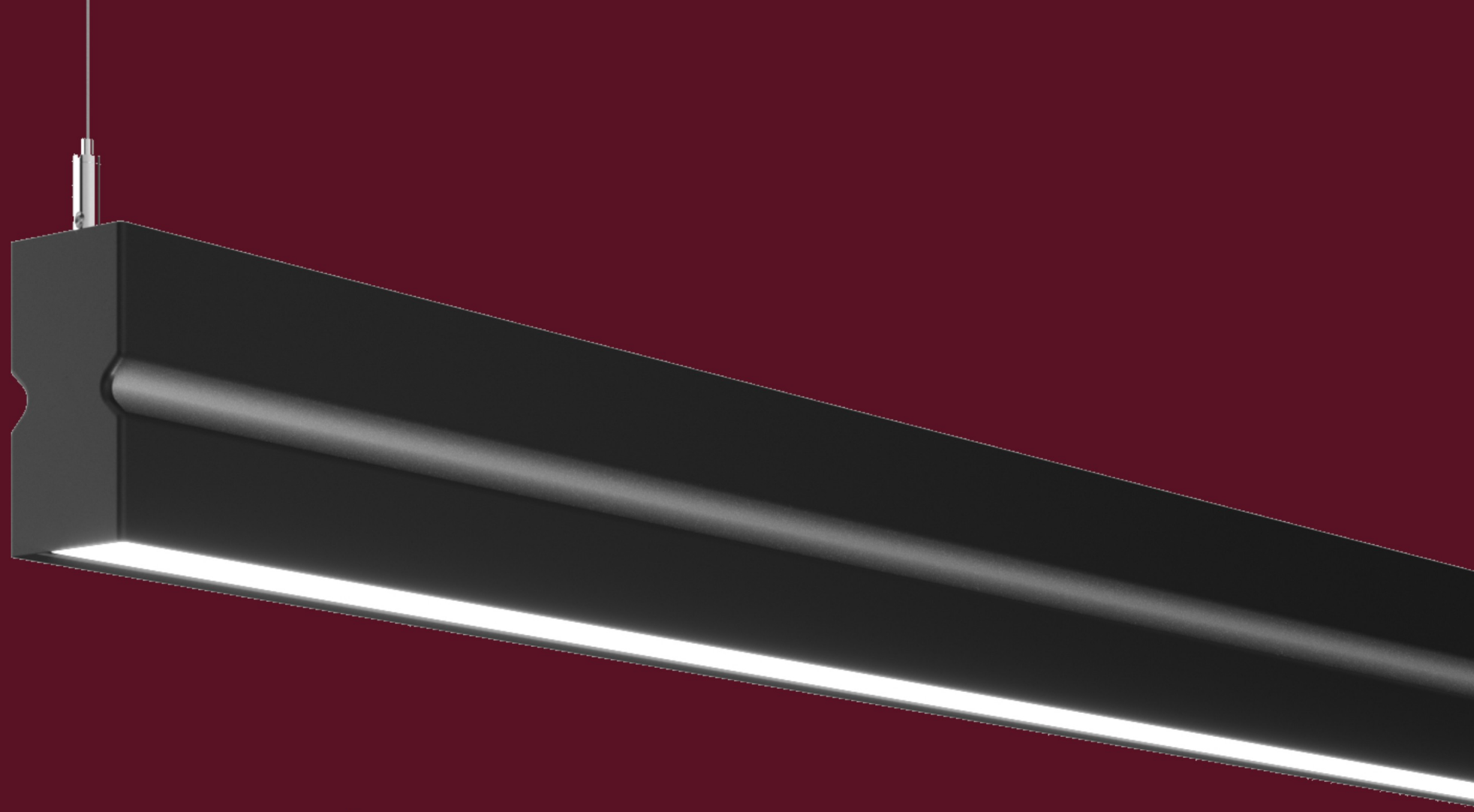

Declare.®

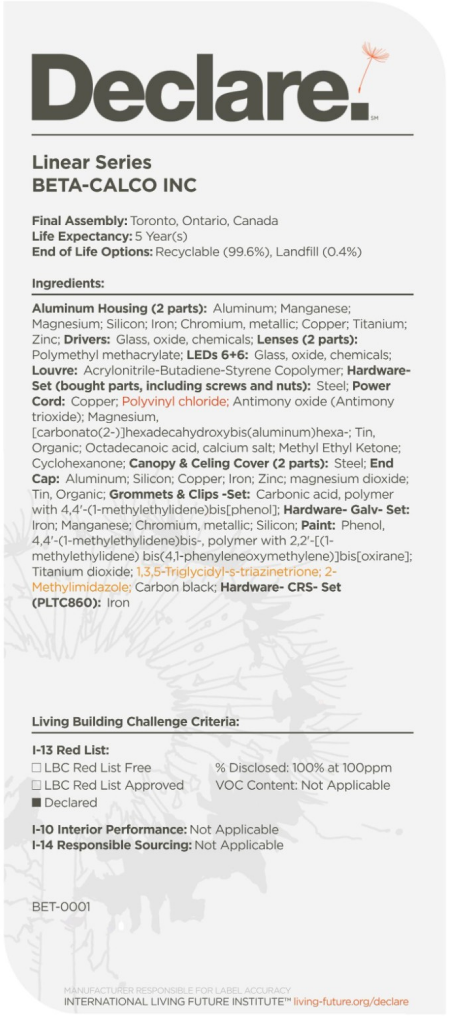


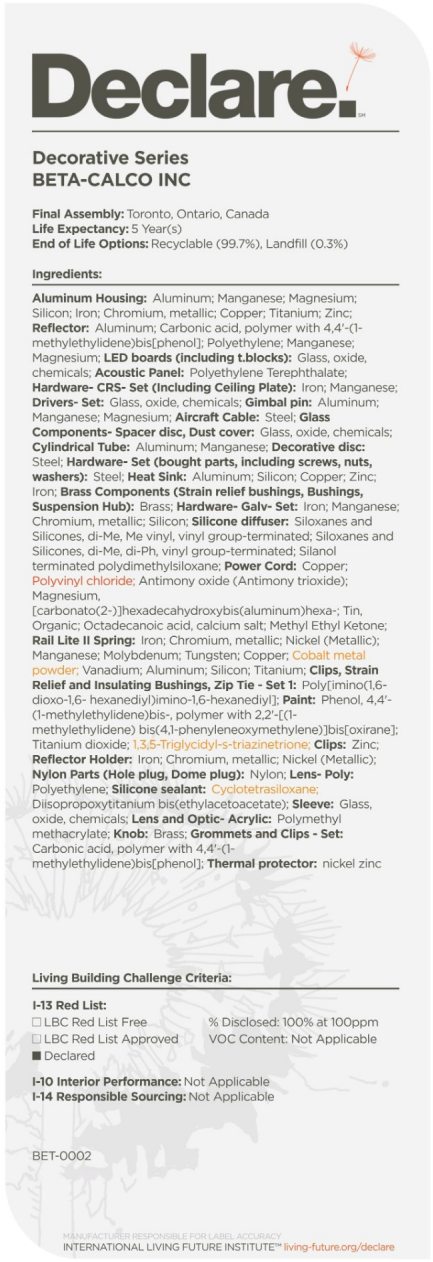


# WHY DECLARE MATTERS

Every year, the building industry accounts for 39% of global carbon emissions, and the health impacts of the built environment are drawing increased scrutiny. In earning a Declare label for our linear and decorative lines, we're joining over 200 manufacturers by responding to the market's demand for decreased emissions and increased transparency.




# BETACALCO

Since 1941, we have held a passion for designing cutting-edge professional lighting that changes how spaces are illuminated while upholding the enduring principles of quality and craftsmanship.

Our objective is to work in lockstep with our clients by developing innovative products that meet their varied design needs and comply with the latest energy and construction standards. Furthermore, our manufacturing infrastructure allows us to scale products and satisfy niche design requirements.

We use leading-edge wellness technologies including BIOS, Tunable White, and Dim to Warm; and employ open-source connectivity to intelligent control systems, including Power over Ethernet.

Our customer-centric approach to service and product design is the basis of our reputation and how we have become a key lighting supplier across the globe.

betacalco.com

sales@betacalco.com