Razer SQ™ - Dimensional Diagrams

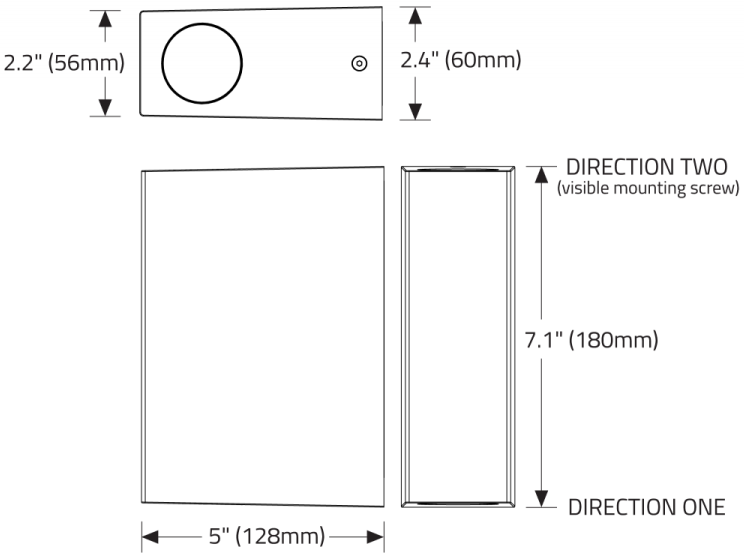

©2026 Beta-Calco Inc. Specifications are subject to change without notice