Hexagon™ - Dimensional Diagrams

2 FT

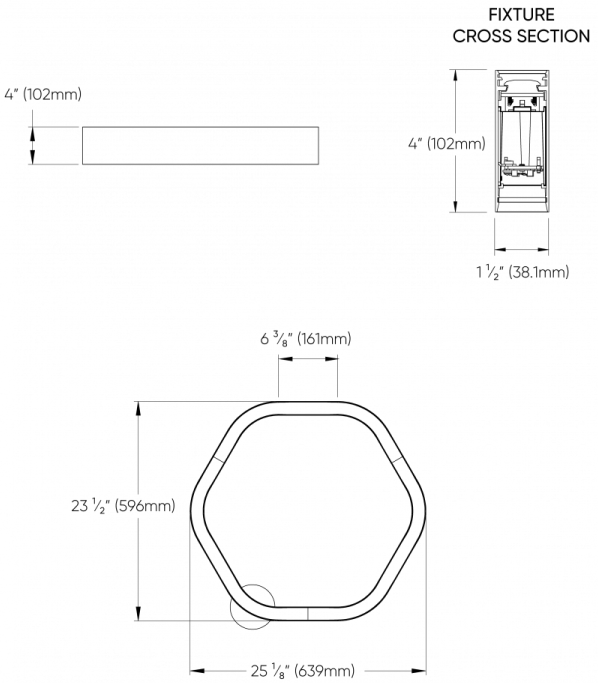

3 FT

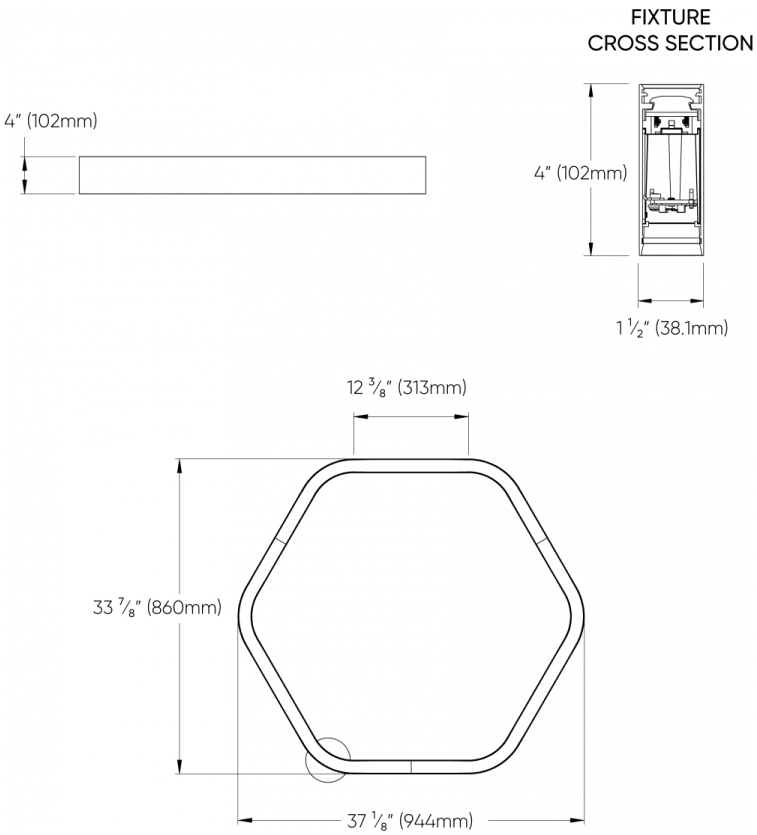

©2026 Beta-Calco Inc. Specifications are subject to change without notice

Hexagon™ - Dimensional Diagrams

4 FT

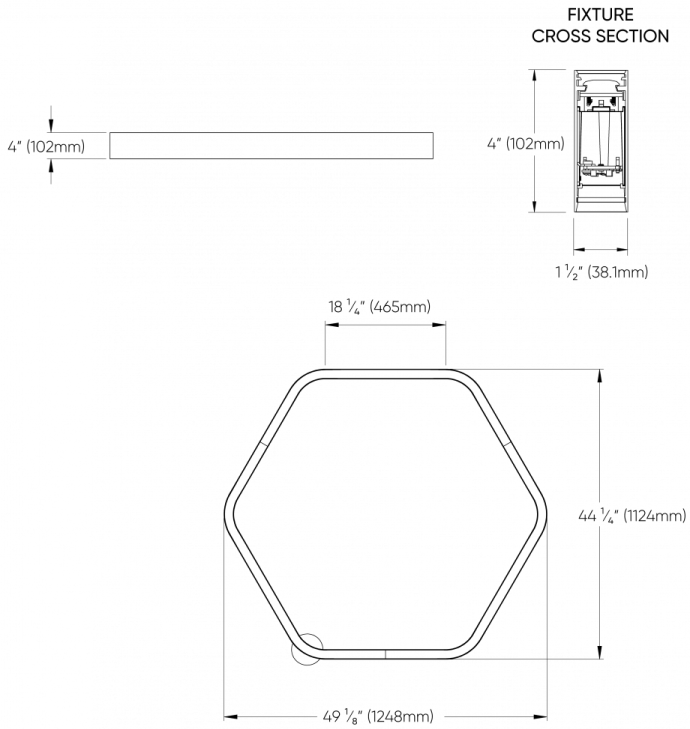

5 FT

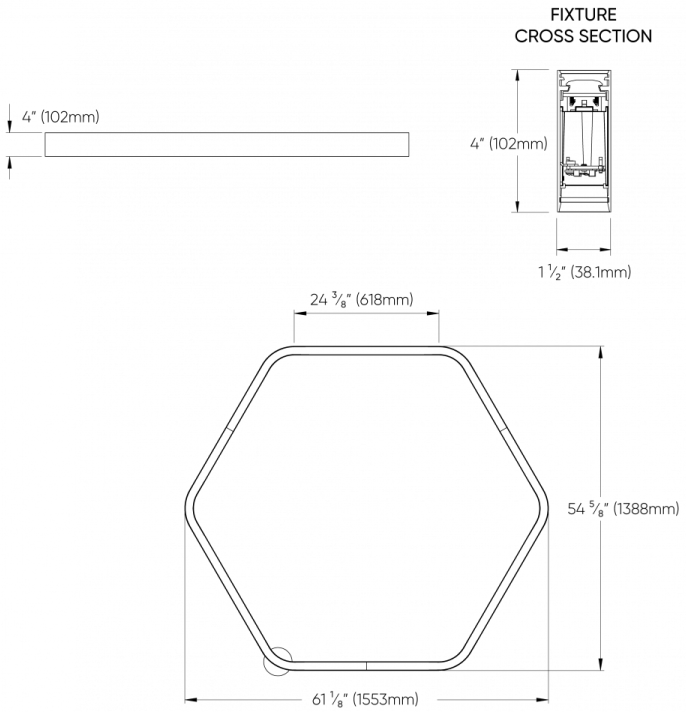

©2026 Beta-Calco Inc. Specifications are subject to change without notice

Hexagon™ - Dimensional Diagrams

6 FT

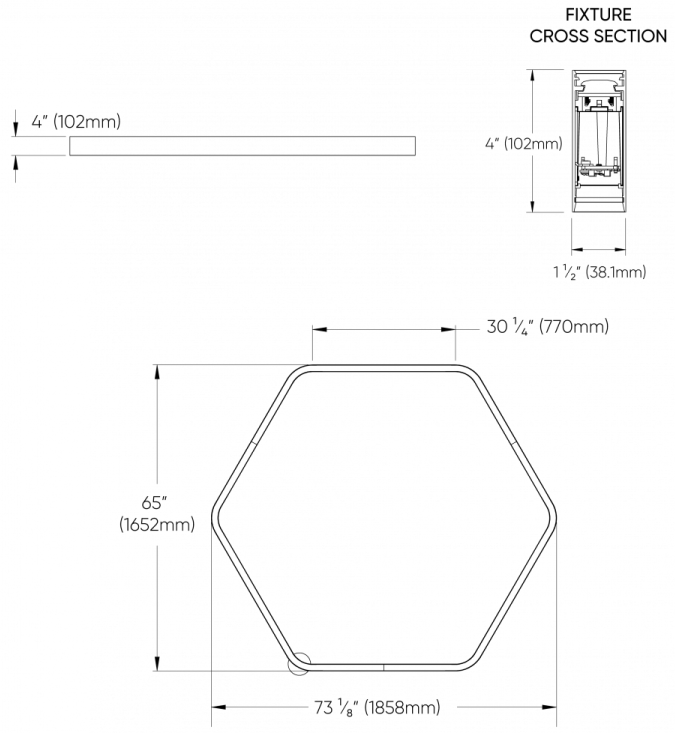

7 FT

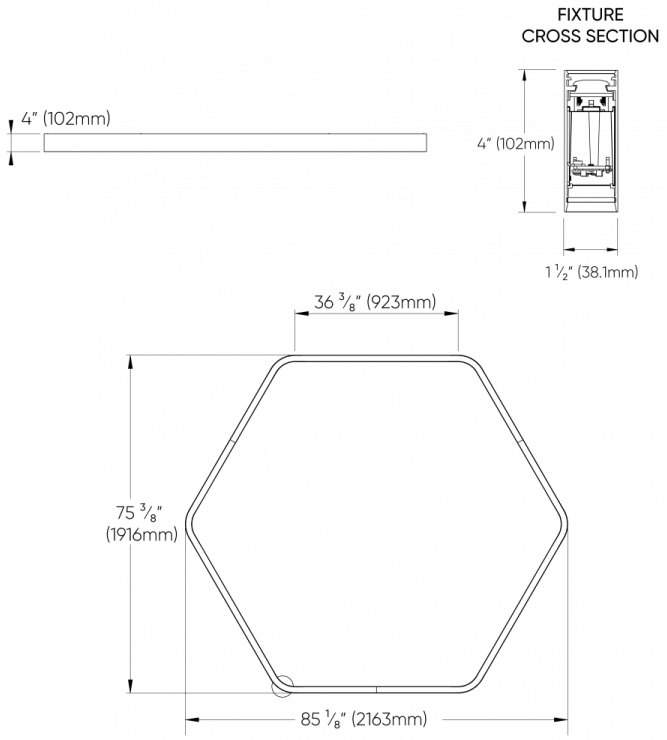

©2026 Beta-Calco Inc. Specifications are subject to change without notice